RTC-ALARM-001 01/03/2026

v1

DRAFT 01-MAR-2026

Page	Description
1	COVER PAGE
2	BLOCK DIAGRAM
3	POWER TREE
4	SCHEMATIC

DESIGN NOTE:
Example text for informational design notes.

DESIGN NOTE:
Example text for debug design notes.

LAYOUT NOTE:
Example text for critical layout guidelines.

DESIGN NOTE:
Example text for cautionary design notes.

DESIGN NOTE:
Example text for critical design notes.

ĐẠI HỌC QUỐC GIA THÀNH PHỐ HỒ CHÍ MINH
TRƯỜNG ĐẠI HỌC BÁCH KHOA

Project: Digital Clock with LCD Display		
Designed by: Group 6	Sheet title: Cover page	Page: 1/4
Checked by: Bui Quoc Bao	Document No:	Size: A3
Approved by:	Revision: 1.0.0	Date: 2026-03-01

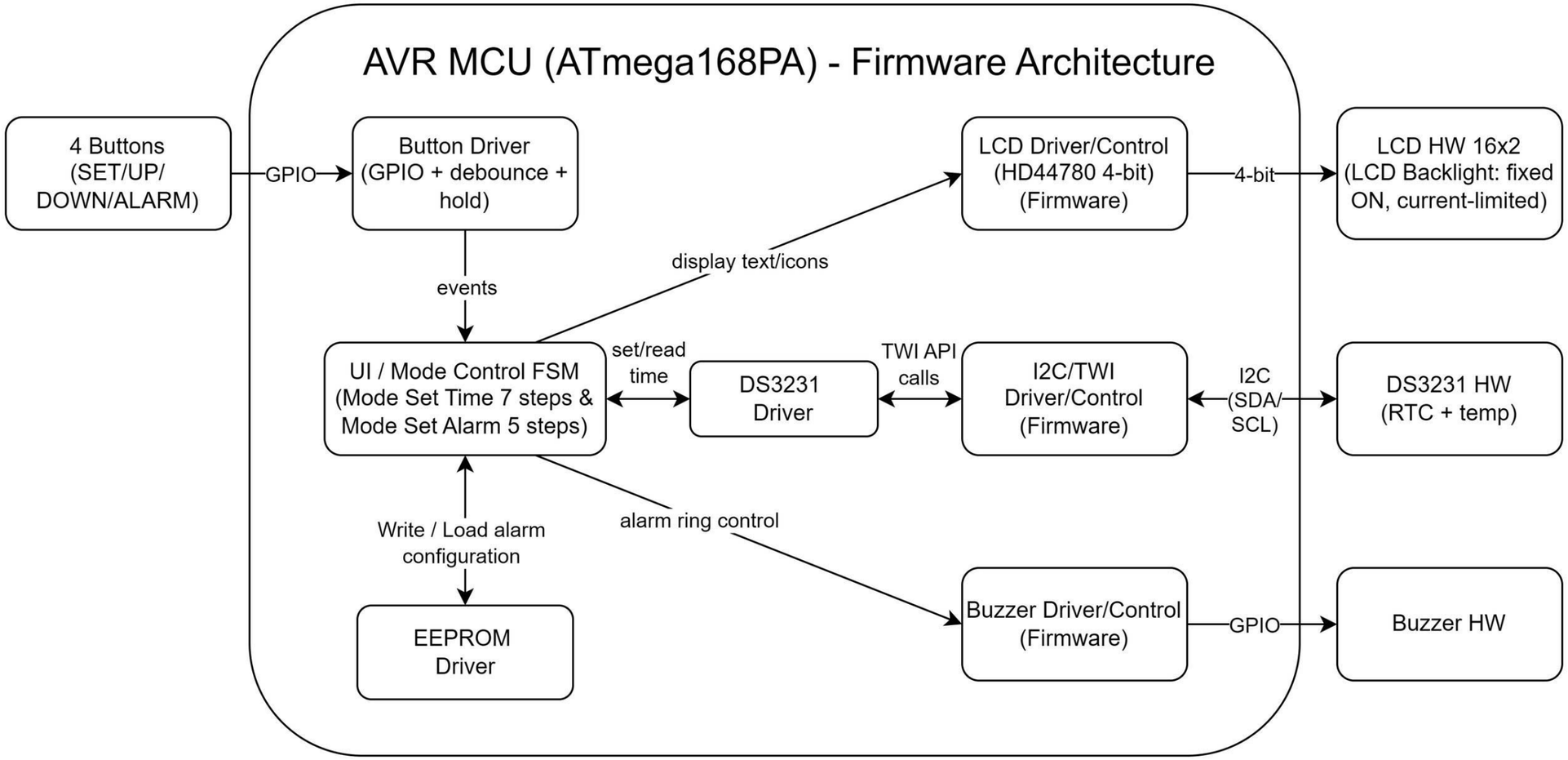

POWER SYSTEM

9V Battery / 9-12V Adapter -> Reverse Polarity Protection-> Input Filter Capacitors -> 5V Regulator (Buck) -> 5V_MAIN -> MCU, LCD, DS3231, Buzzer (via transistor driver)

ĐẠI HỌC QUỐC GIA THÀNH PHỐ HỒ CHÍ MINH
TRƯỜNG ĐẠI HỌC BÁCH KHOA

Project: Digital Clock with LCD Display		
Designed by: Group 6	Sheet title: Block diagram	Page: 2/4
Checked by: Bui Quoc Bao	Document No:	Size: A3
Approved by:	Revision: 1.0.0	Date: 2026-03-01

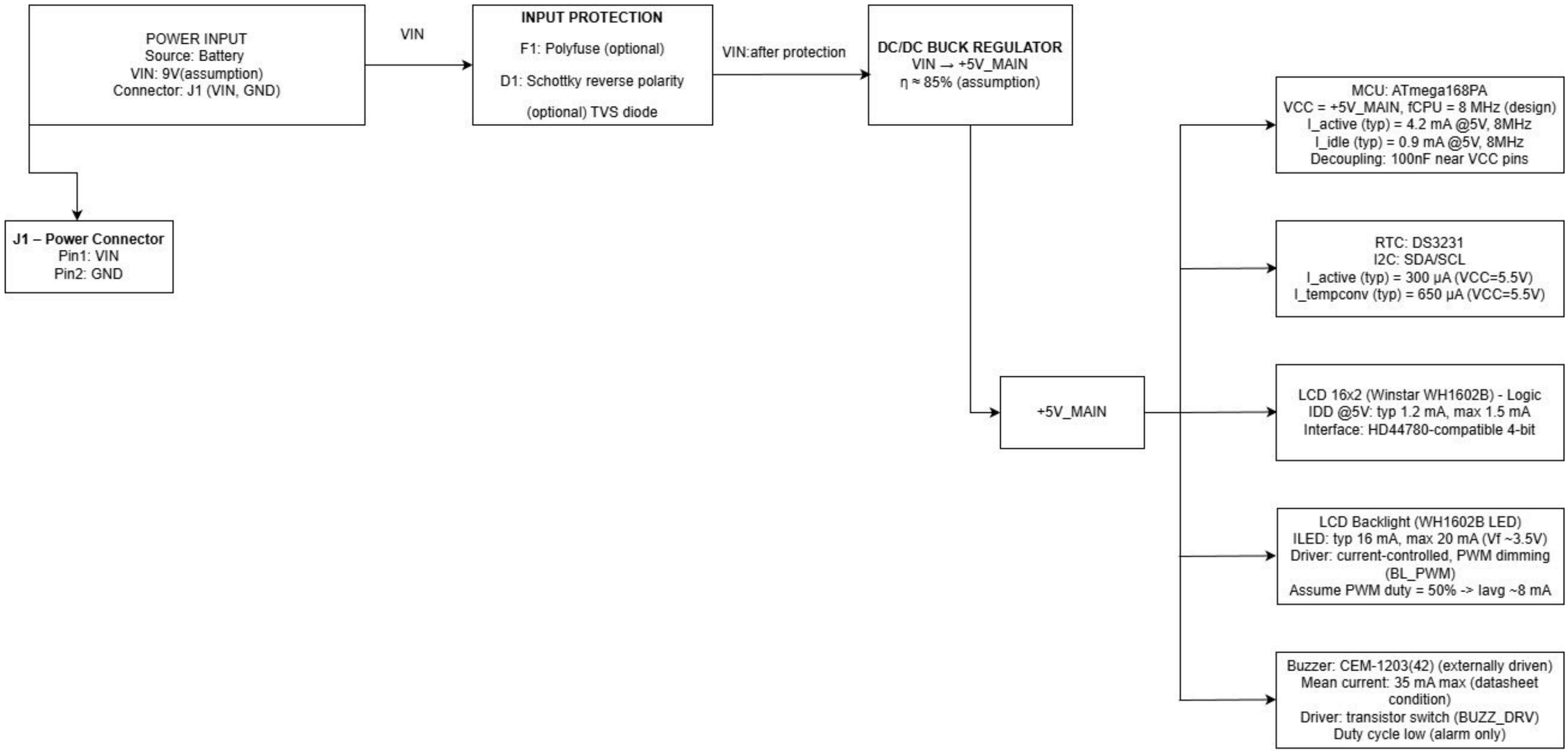

ĐẠI HỌC QUỐC GIA THÀNH PHỐ HỒ CHÍ MINH
TRƯỜNG ĐẠI HỌC BÁCH KHOA

Project: Digital Clock with LCD Display		
Designed by: Group 6	Sheet title: Power tree	Page: 3/4
Checked by: Bui Quoc Bao	Document No:	Size: A3
Approved by:	Revision: 1.0.0	Date: 2026-03-01

POWER SUPPLY

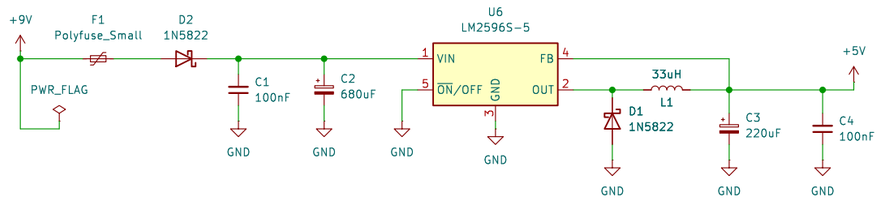

BUTTONS

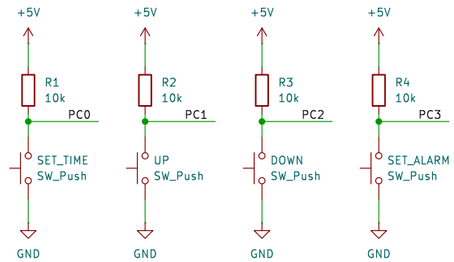

BUZZER DRIVER

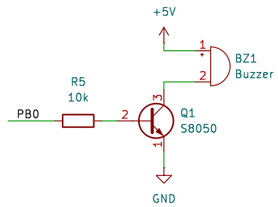

REAL-TIME CLOCK

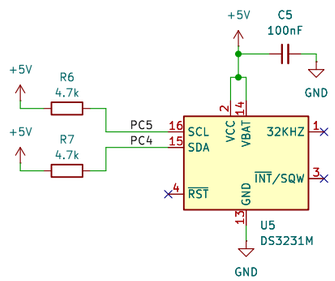

MICROCONTROLLER

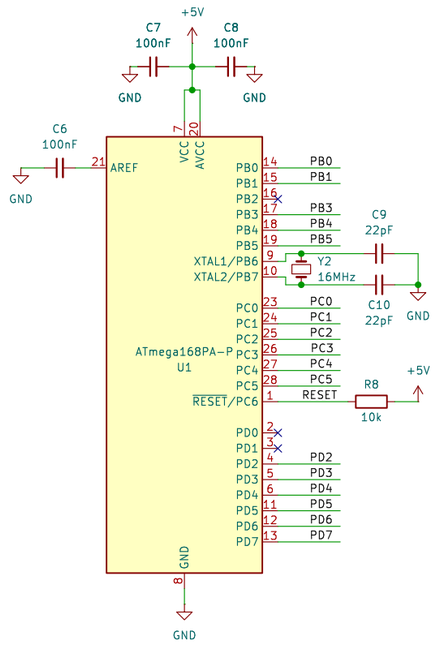

LCD DISPLAY

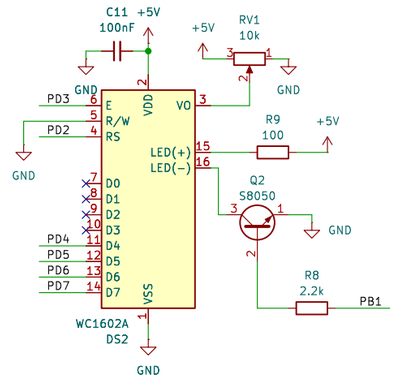

AVR ISP HEADER

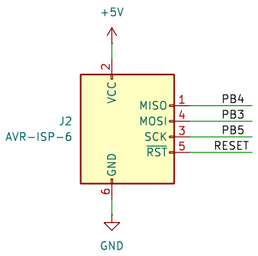

ĐẠI HỌC QUỐC GIA THÀNH PHỐ HỒ CHÍ MINH
TRƯỜNG ĐẠI HỌC BÁCH KHOA

Project: Digital Clock with LCD Display		
Designed by: Group 6	Sheet title: Schematic	Page: 4/4
Checked by: Bui Quoc Bao	Document No:	Size: A3
Approved by:	Revision: 1.0.0	Date: 2026-03-01